UORO®

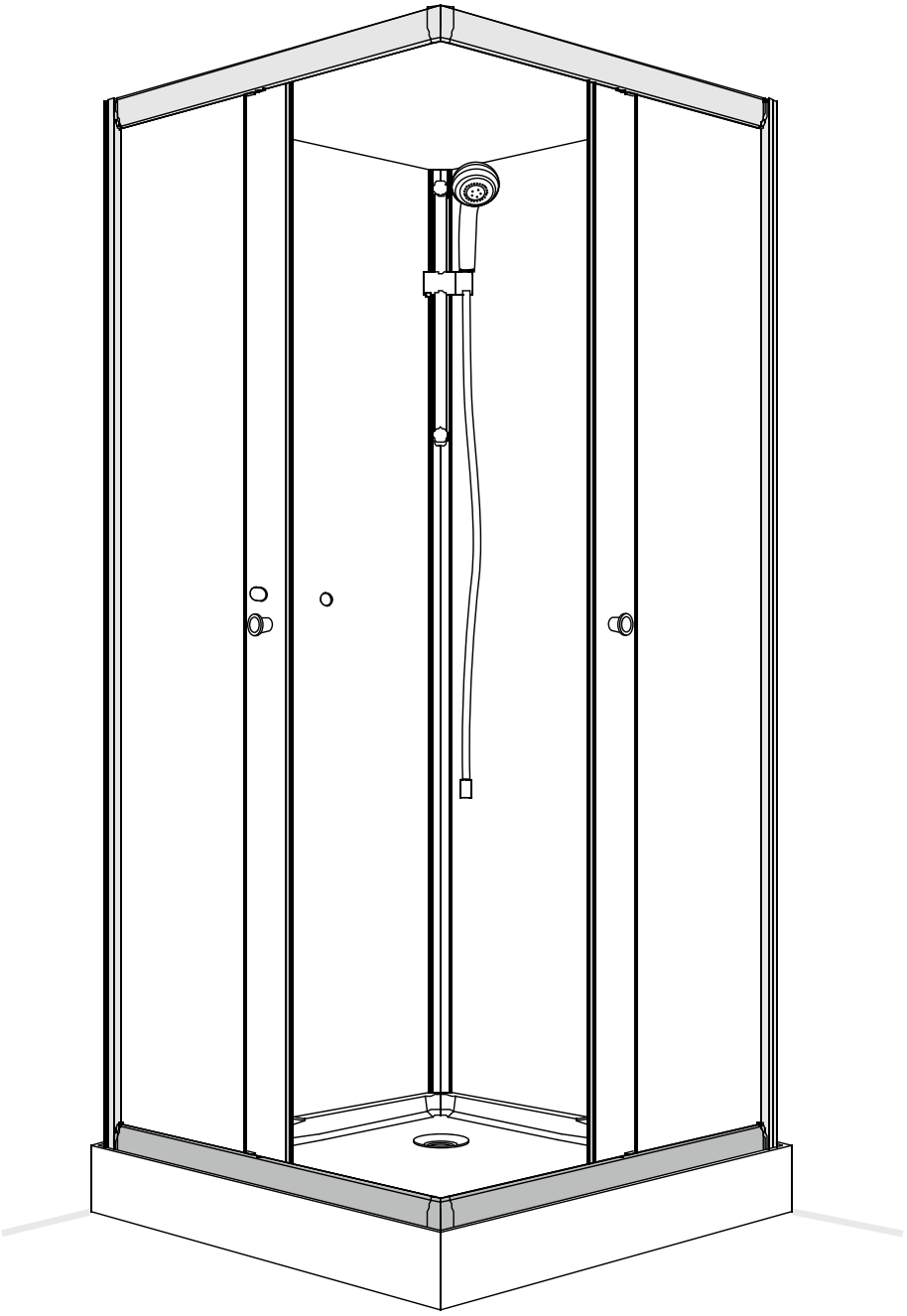

LAKE

Getting started / Komma igång

CE EN14428	This product fulfils the EN14428 standard		Goggles are recommended to protect the eyes
CE EN12150	All glass used are tempered security glass		Caution: Always Handle Glass With Care! Always protect the edges and corners of the glass when assembling.
	2 people are recommended to assemble this shower enclosure		Gloves are recommended to prevent slippery on glass

Tools needed / Verktyg

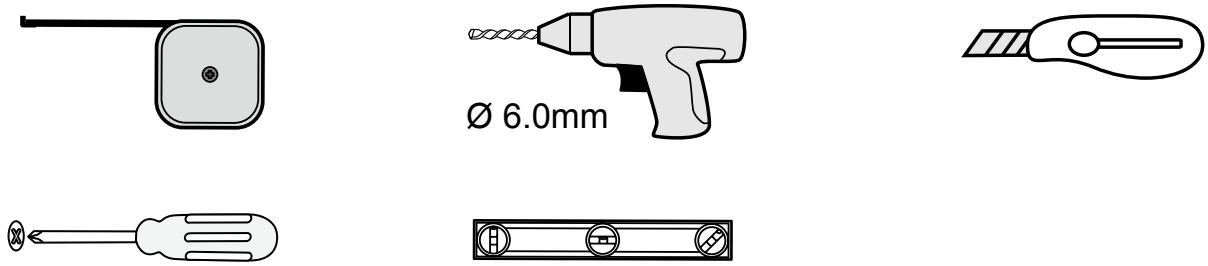

Installing Accessories / Monteringssats

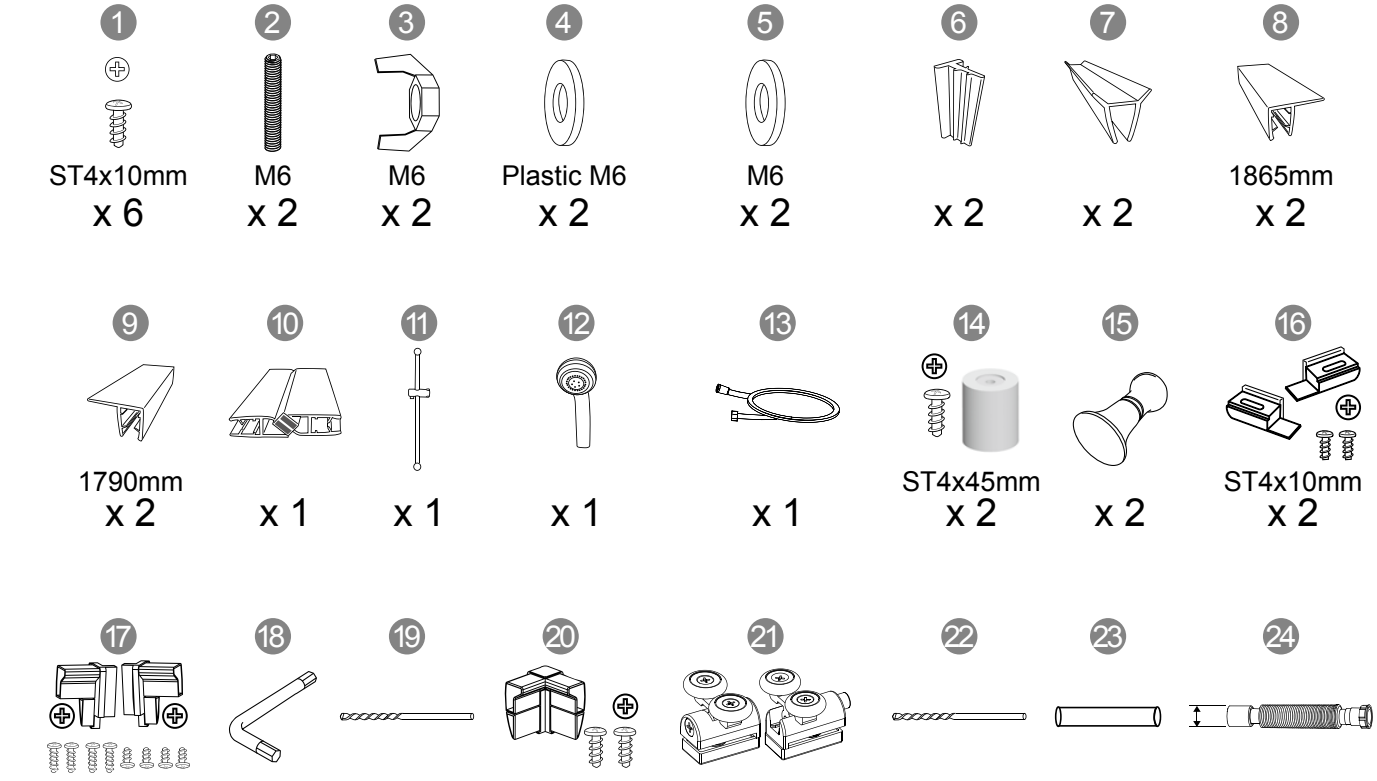

1	2	3	4	5	6	7	8
ST4x10mm	M6	M6	Plastic M6	M6			1865mm
x 6	x 2	x 2	x 2	x 2	x 2	x 2	x 2
9	10	11	12	13	14	15	16
1790mm					ST4x45mm		ST4x10mm
x 2	x 1	x 1	x 1	x 1	x 2	x 2	x 2
17	18	19	20	21	22	23	24
ST4x16mm ST4x10mm		Ø3.2mm	ST4x10mm	For 70 x 90 model only	Ø2.8mm		Ø40mm
x 2	x 1	x 1	x 2	x 4	x 1	x 1	x 1

Measurement / Måttskiss

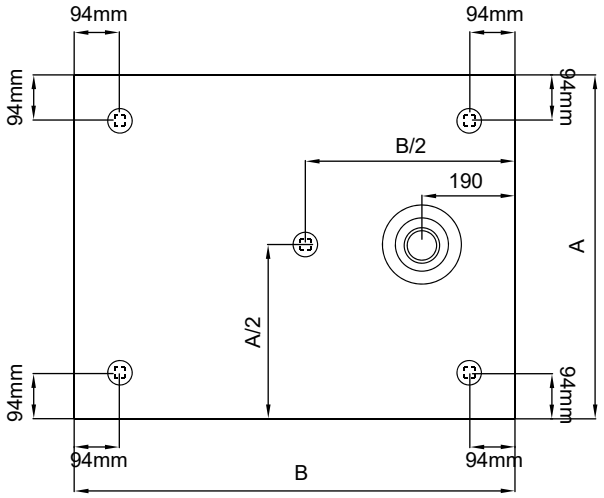

70x90
90x70

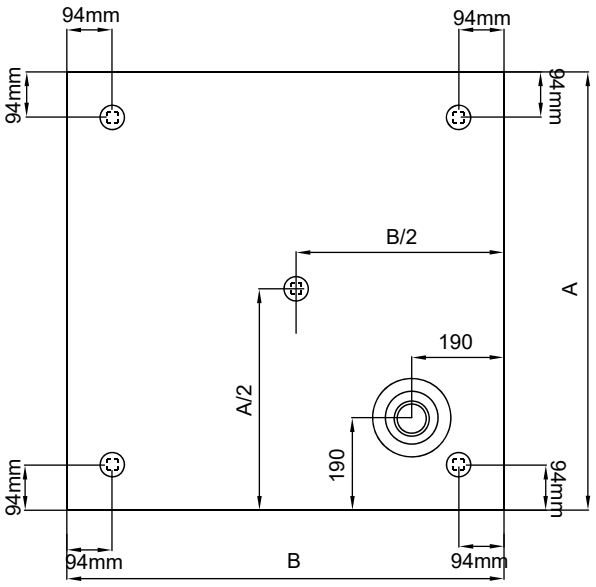

90x90
80x80

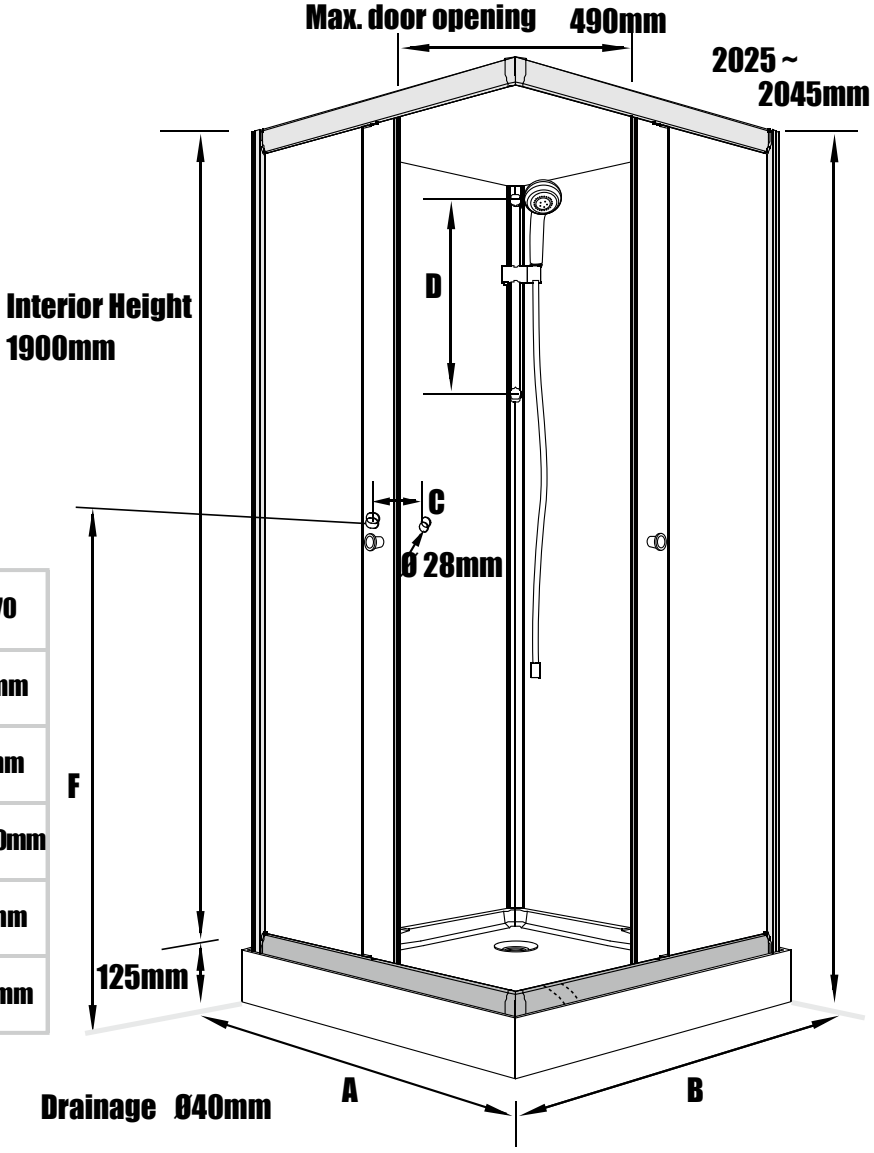

Model	90x90	80x80	70x90	90x70
A	900mm	800mm	700mm	900mm
B	900mm	800mm	900mm	700mm
C	150-160mm	150-160mm	150-160mm	150-160mm
D	420mm	420mm	420mm	420mm
F	1090mm	1090mm	1090mm	1090mm

Exploded view / Sprängskiss

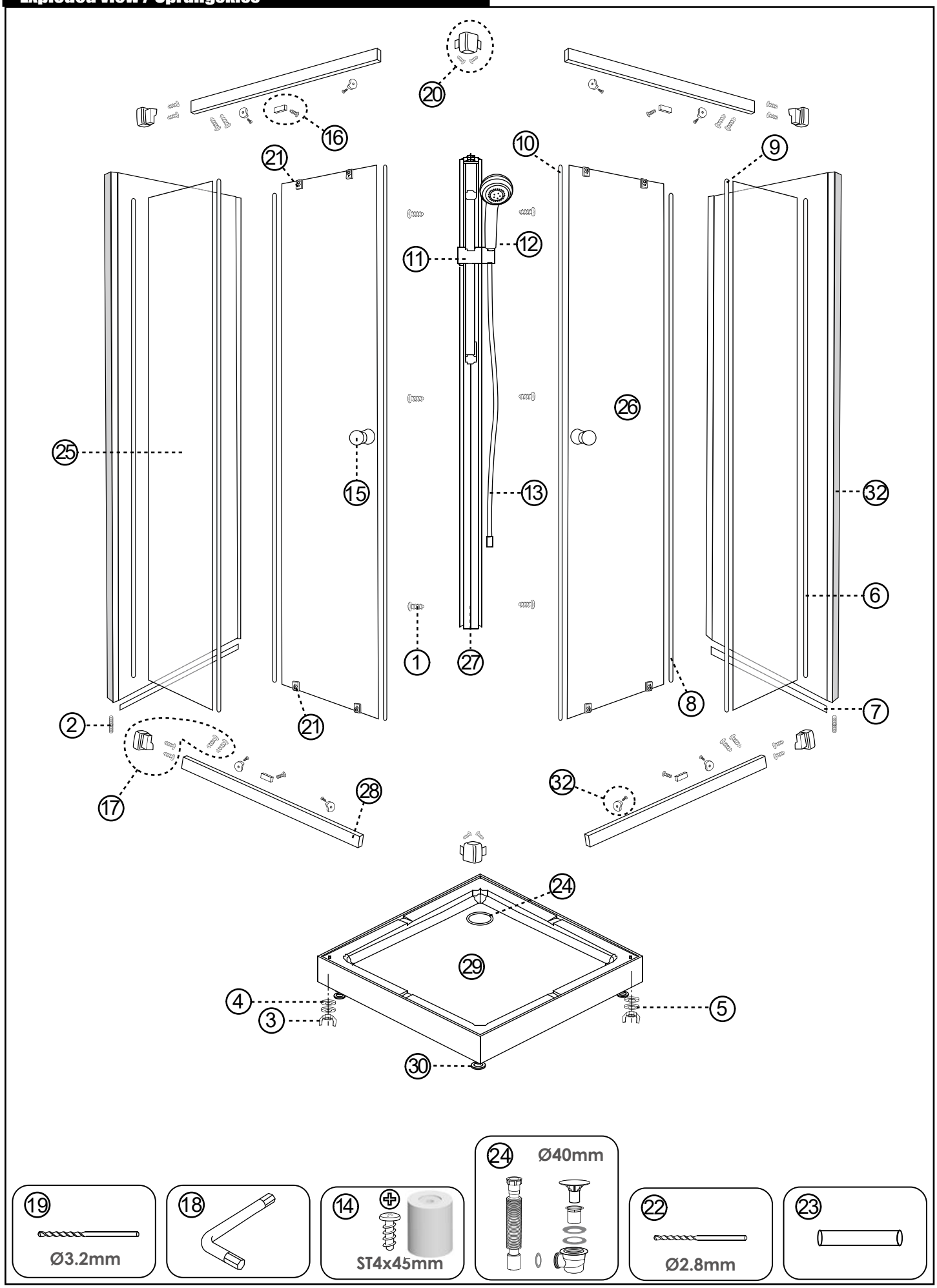

70 x 90 model

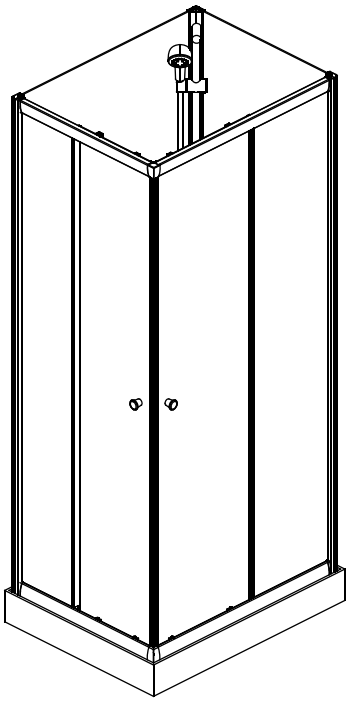

5816B

Left

Right

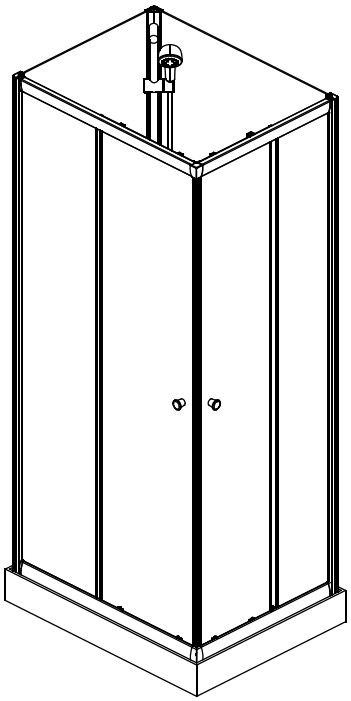

5816A

1

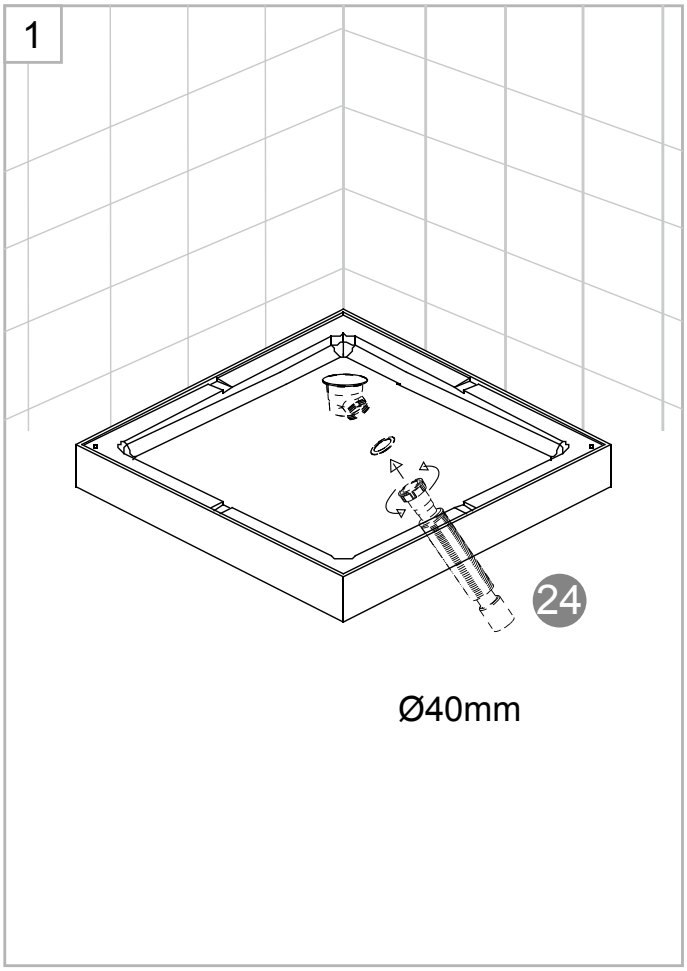

70 x 90 model

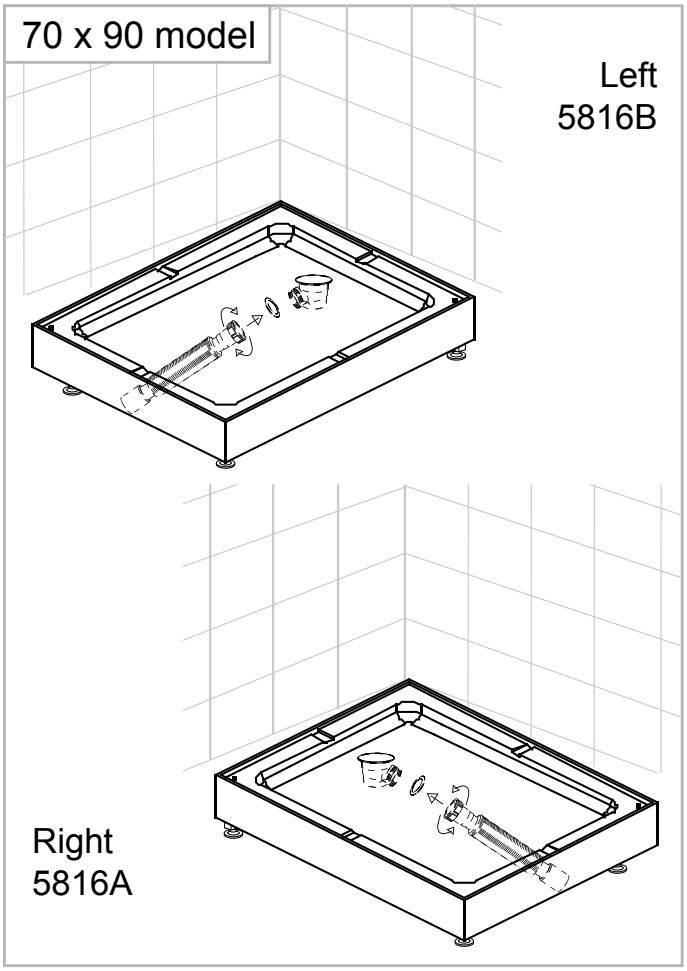

2

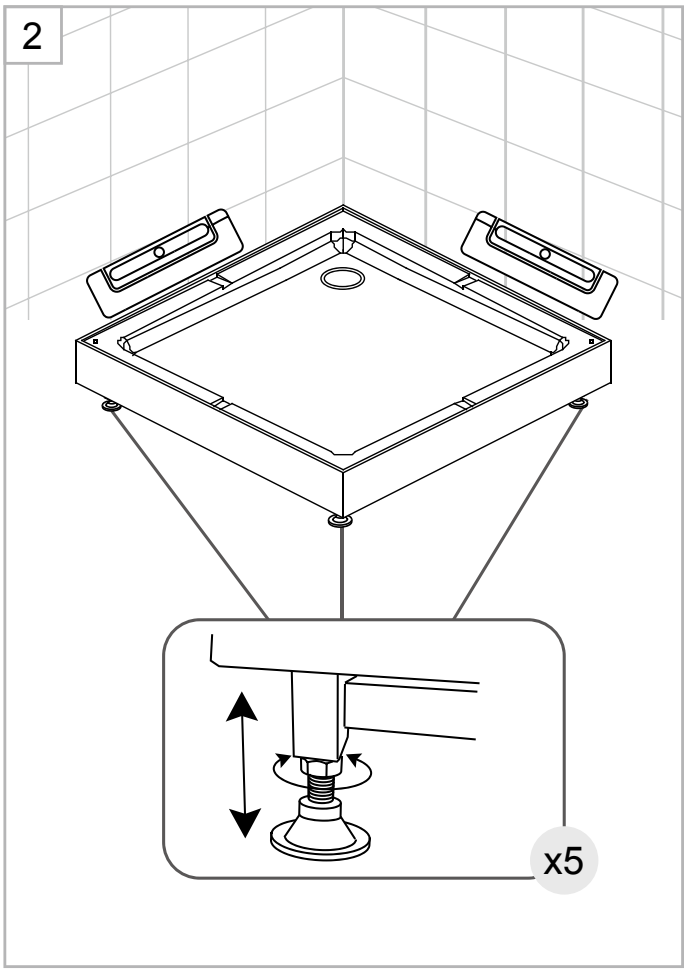

70 x 90 model

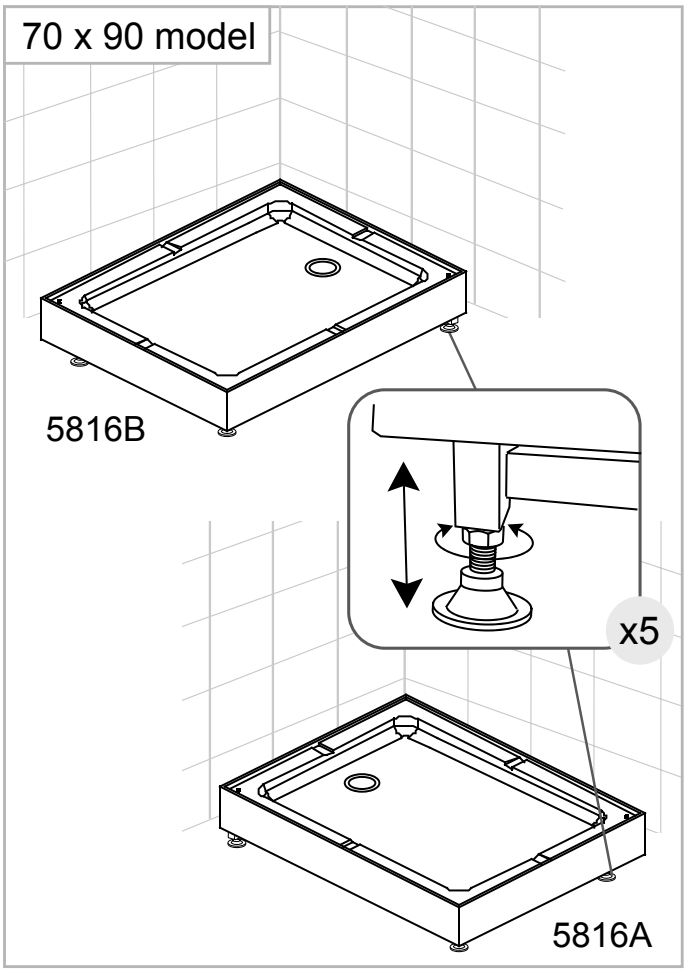

3

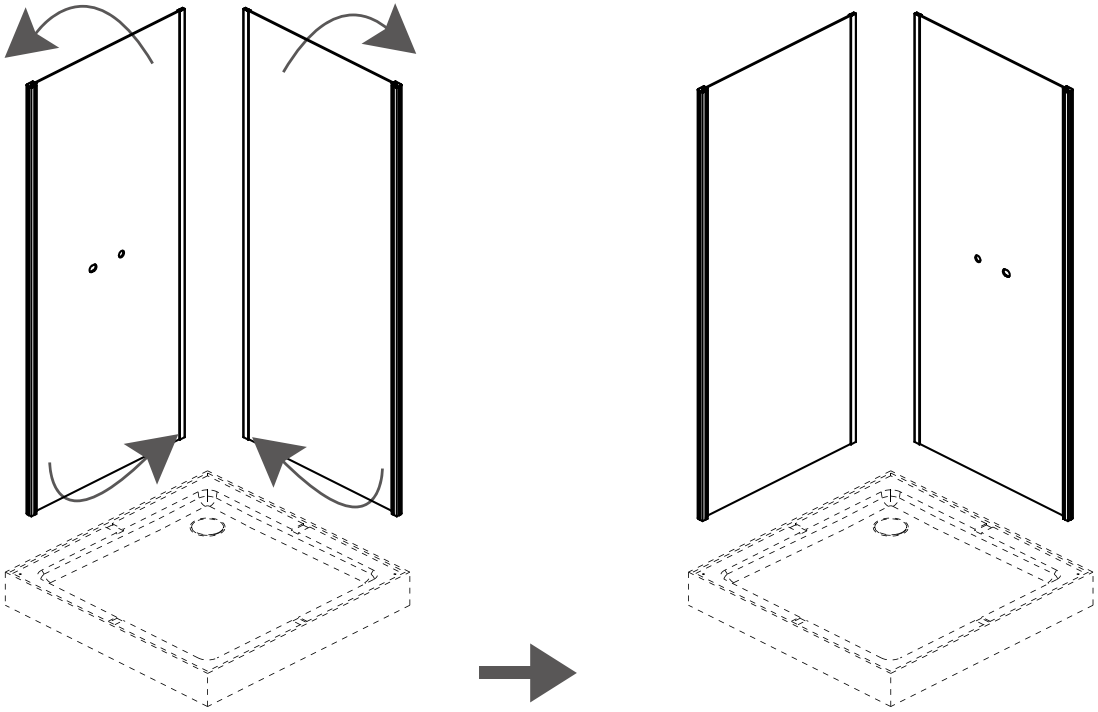

4

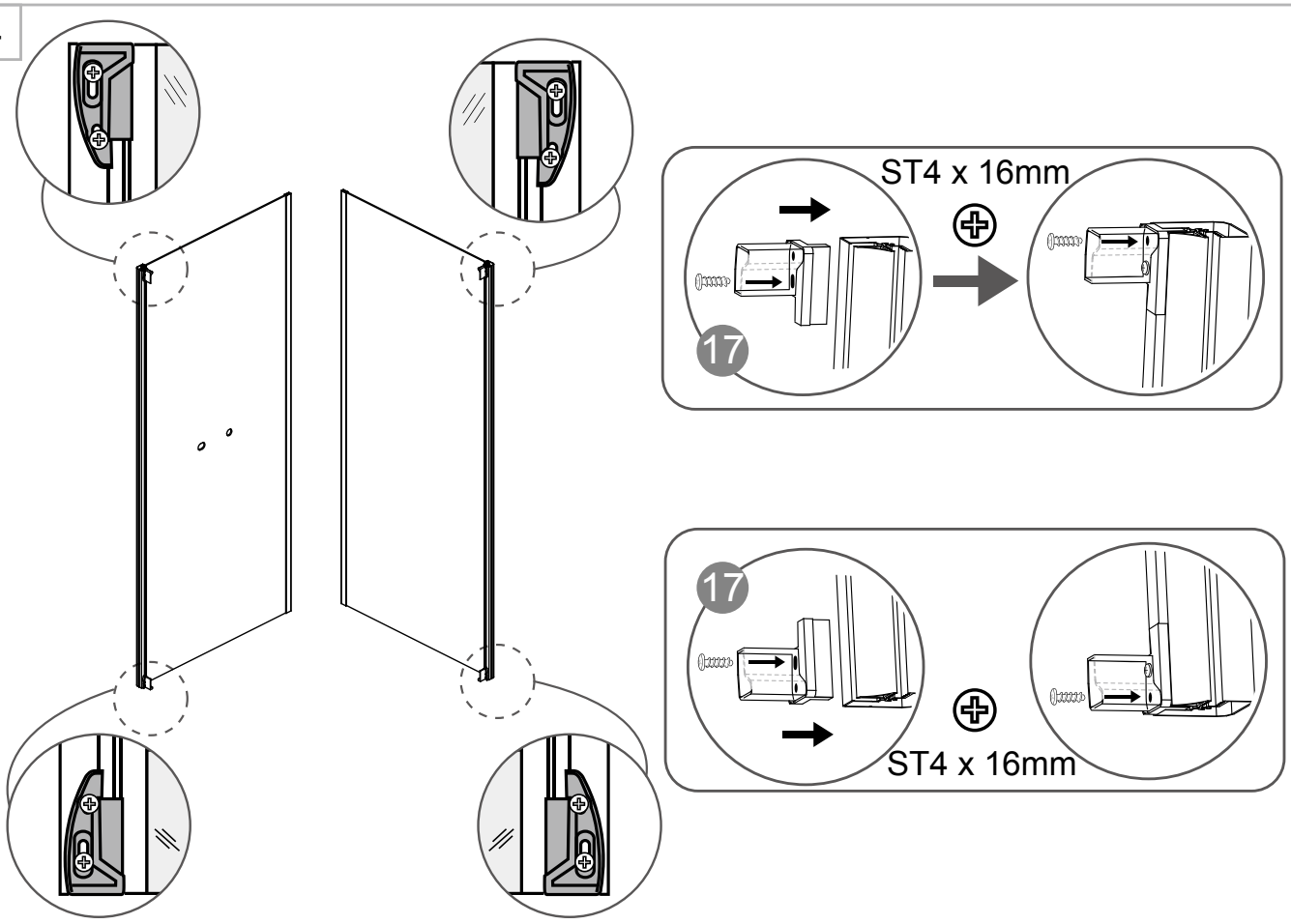

5

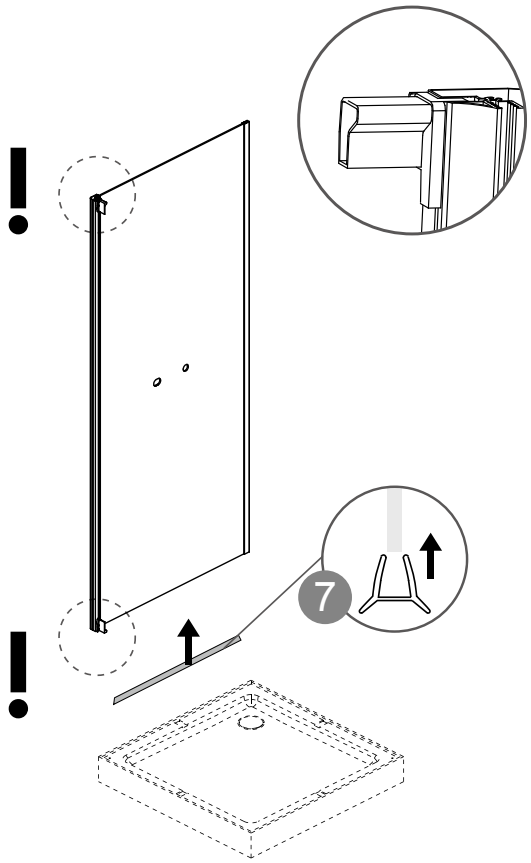

6

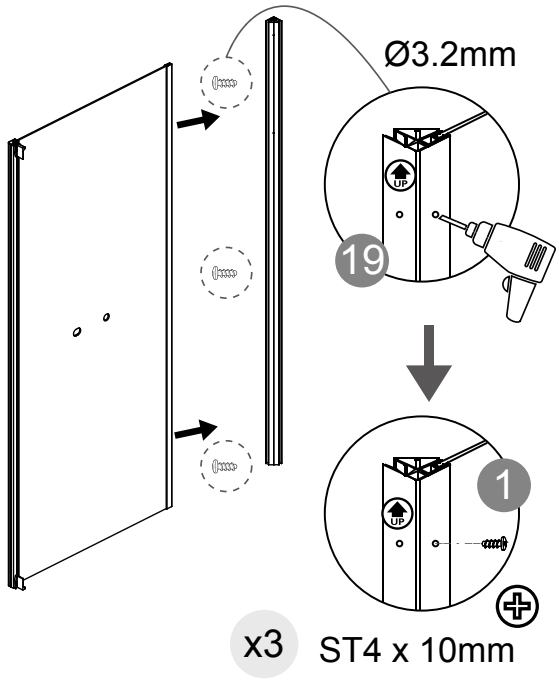

70 x 90 model

Left

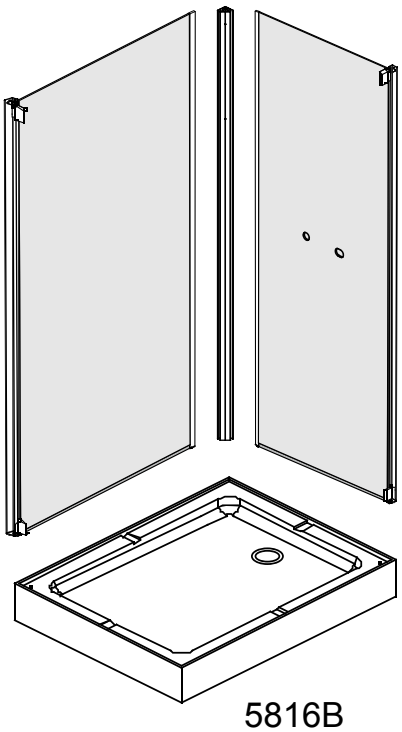

5816B

Right

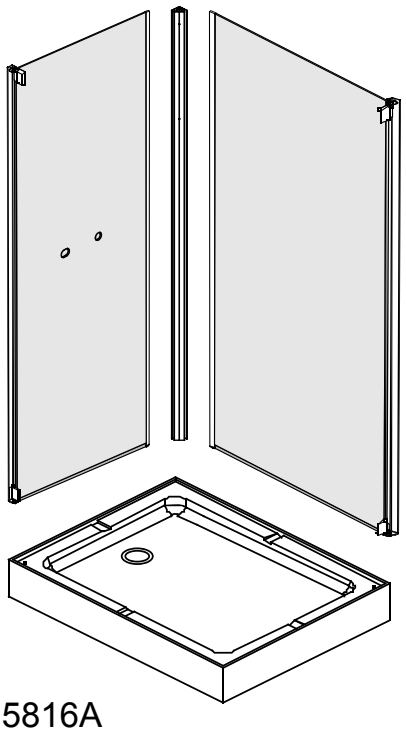

5816A

7

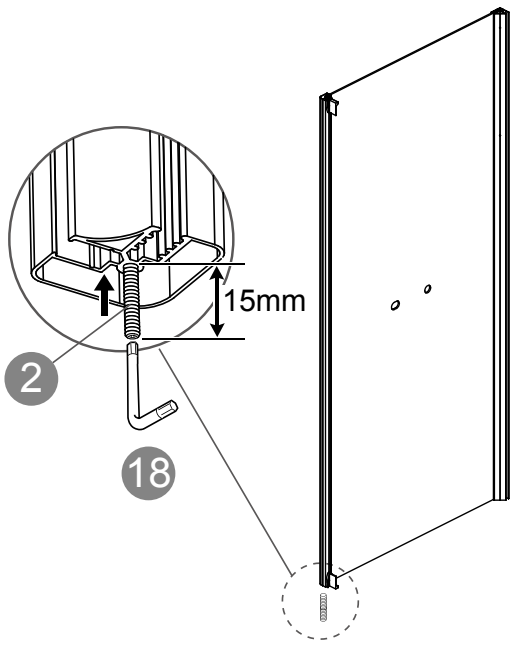

8

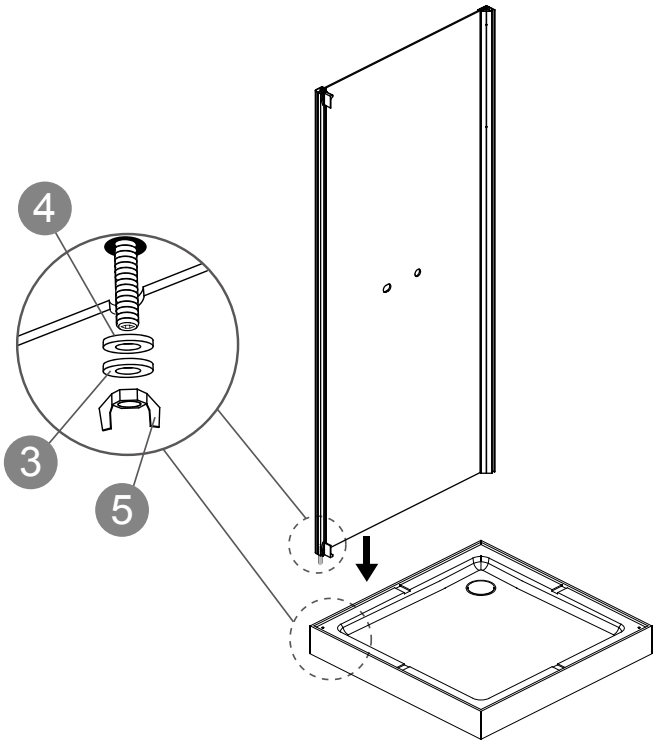

9

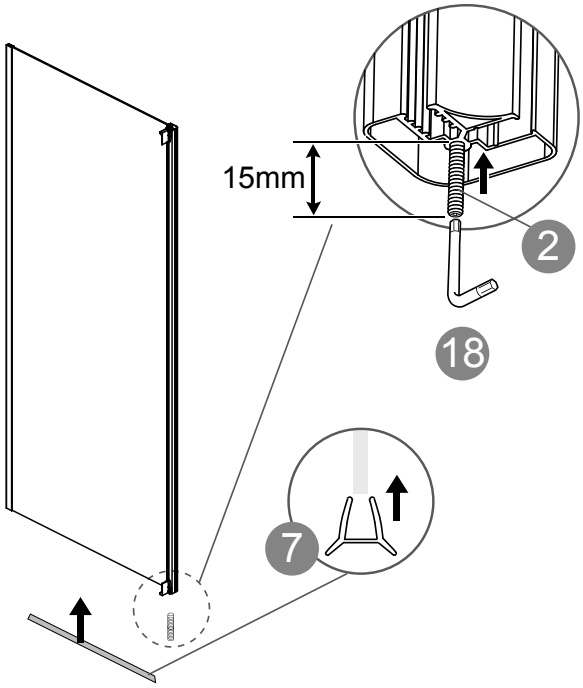

10

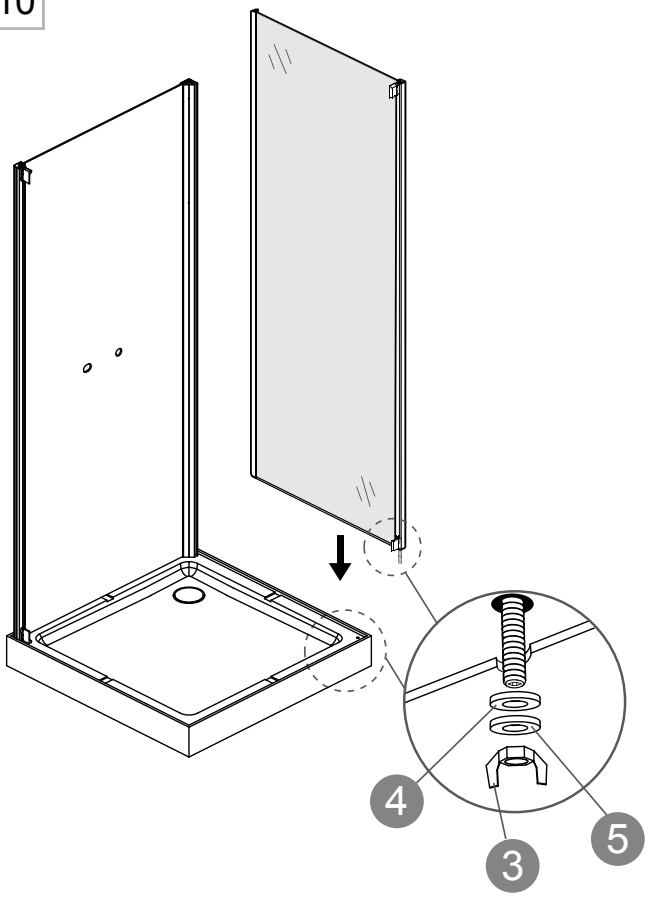

11

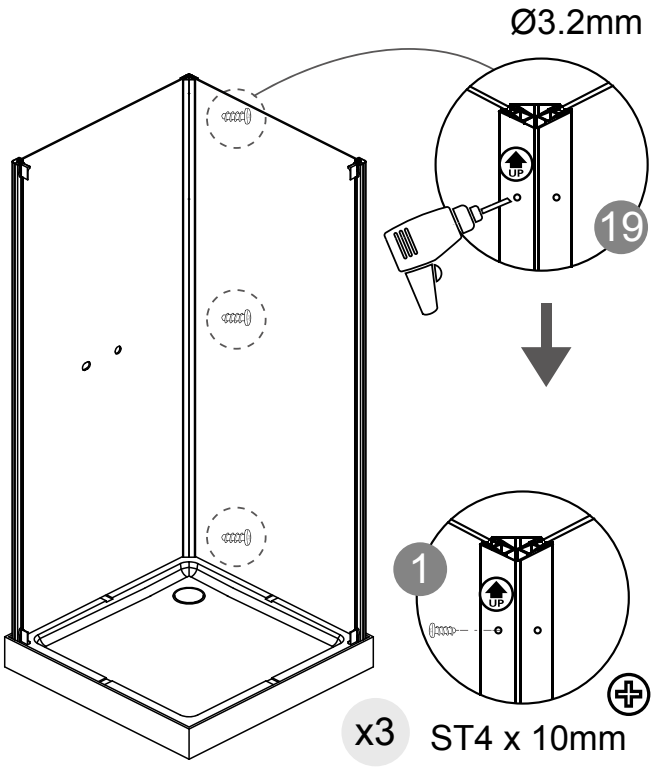

12

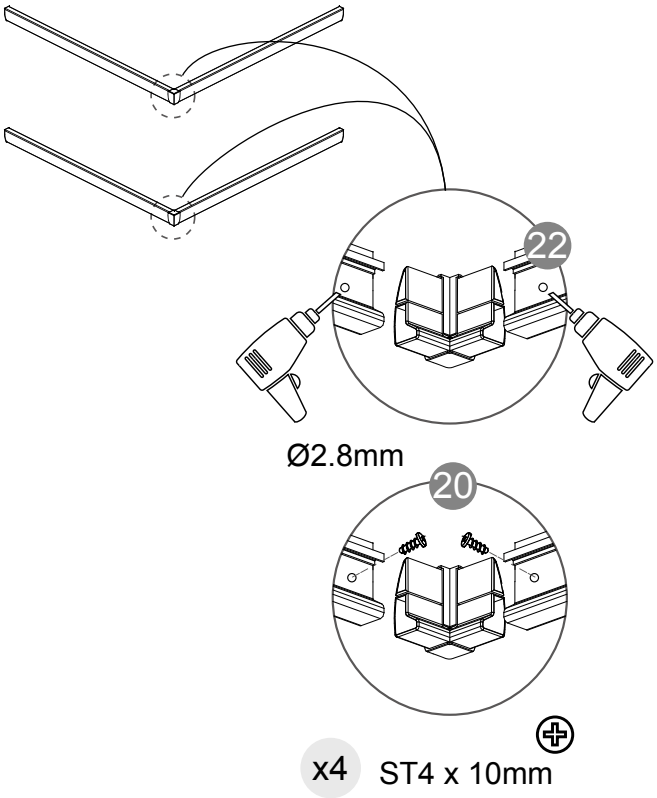

13

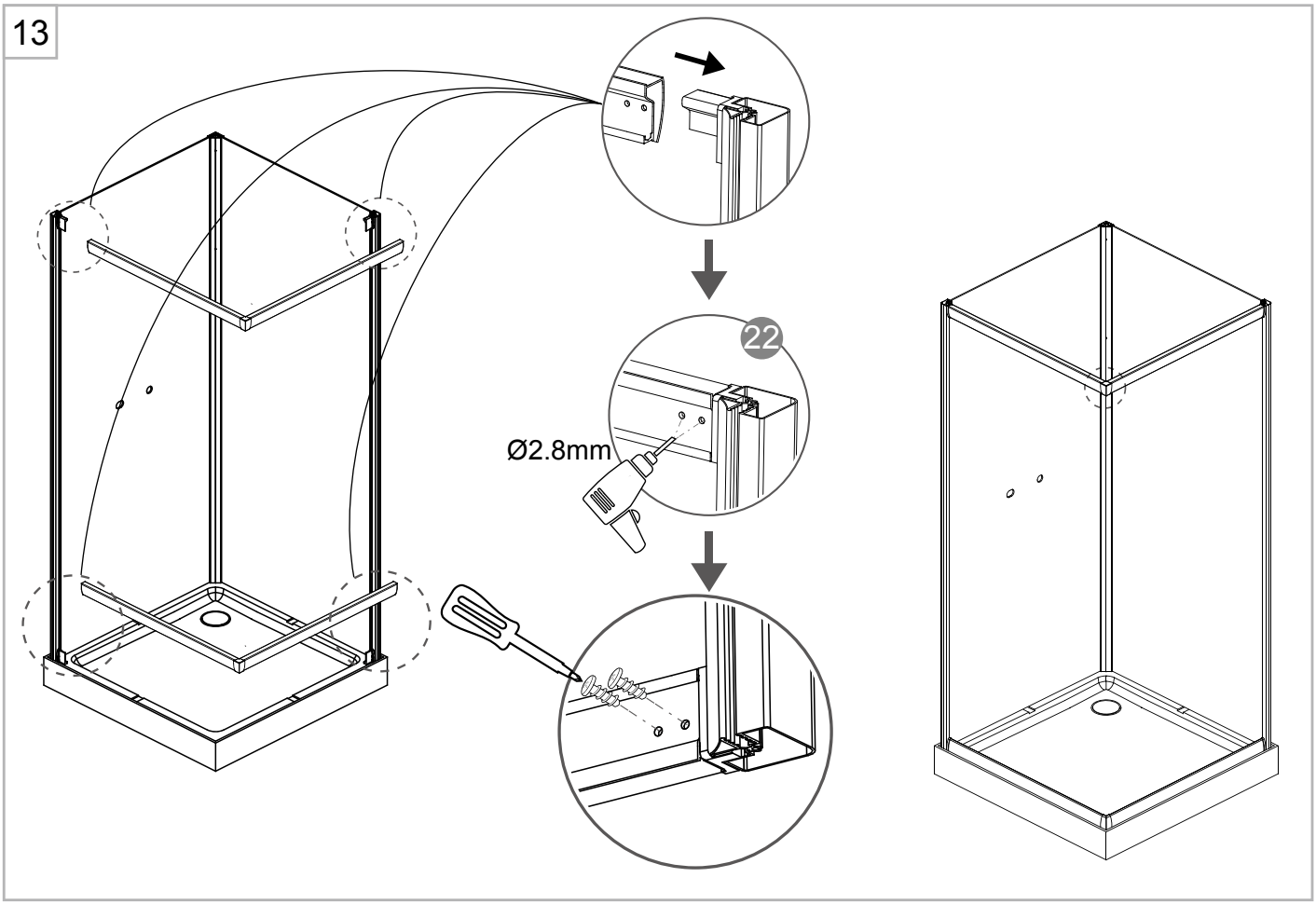

14

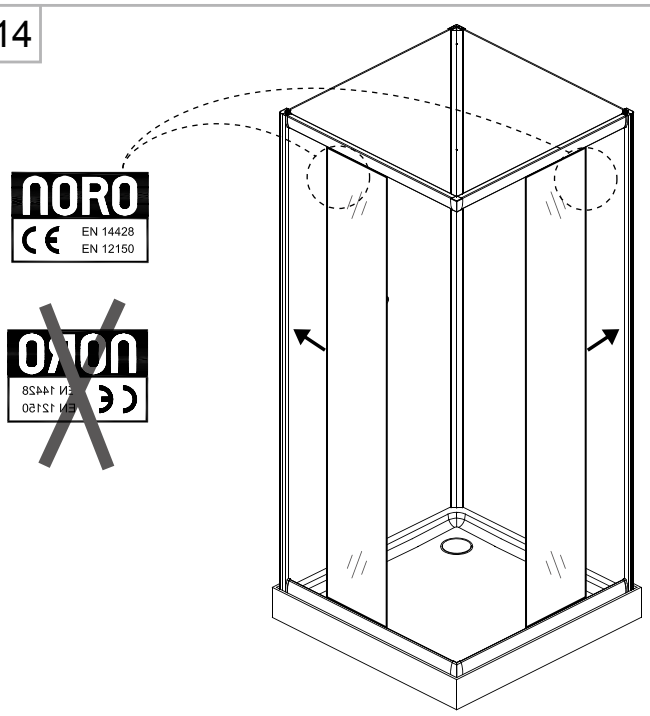

15

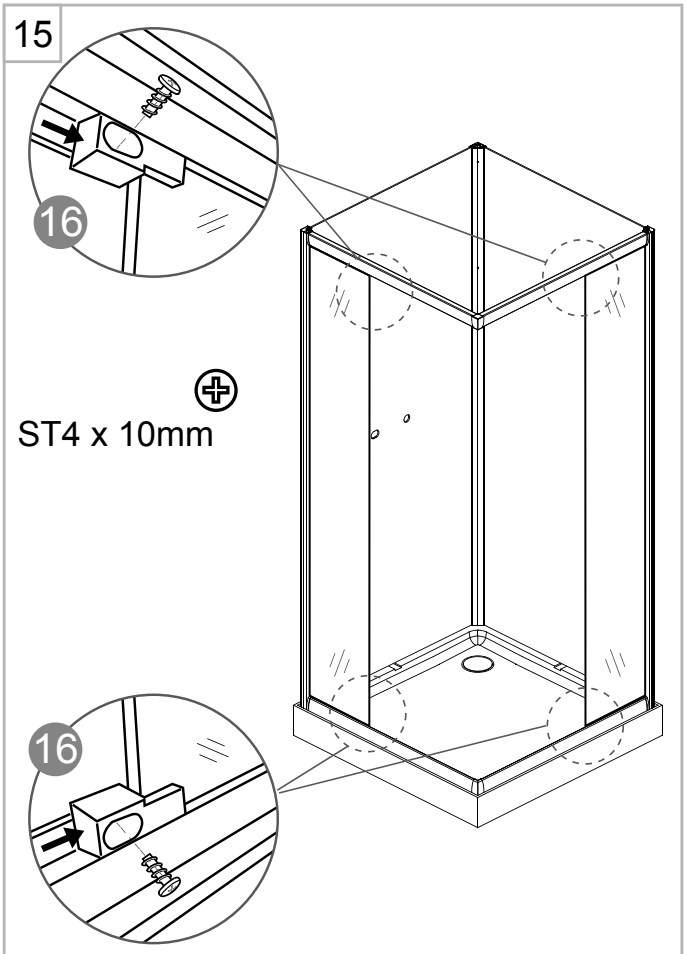

16

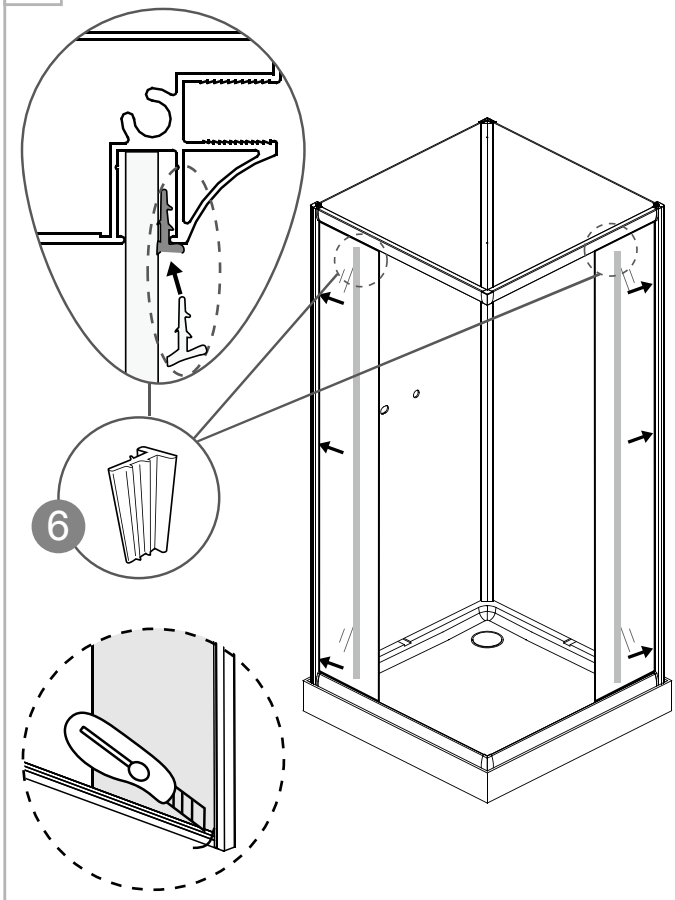

17

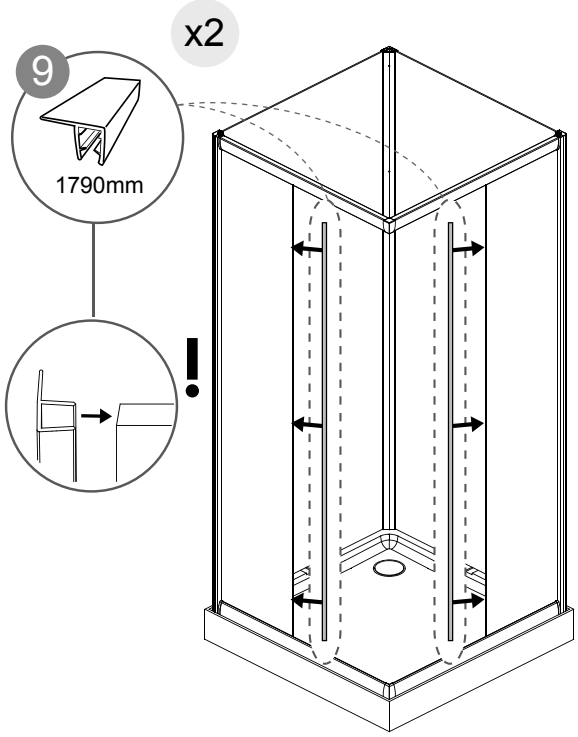

70 x 90 model

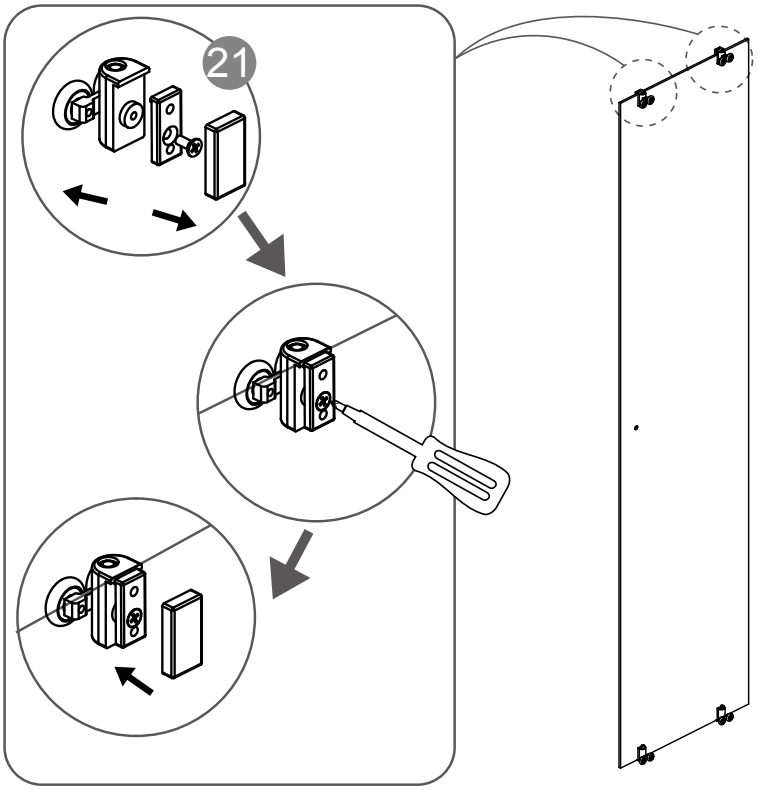

70 x 90 model

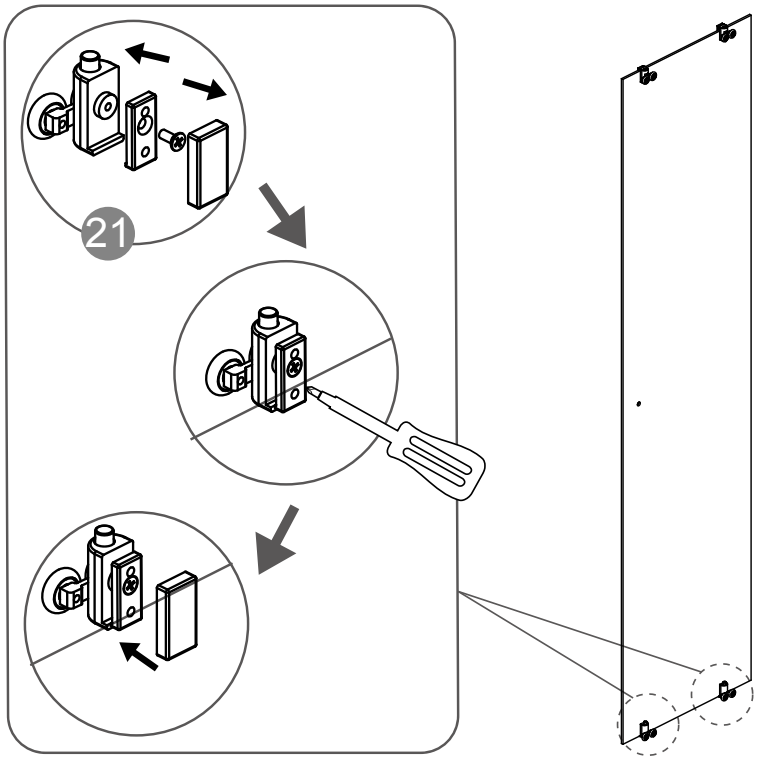

18

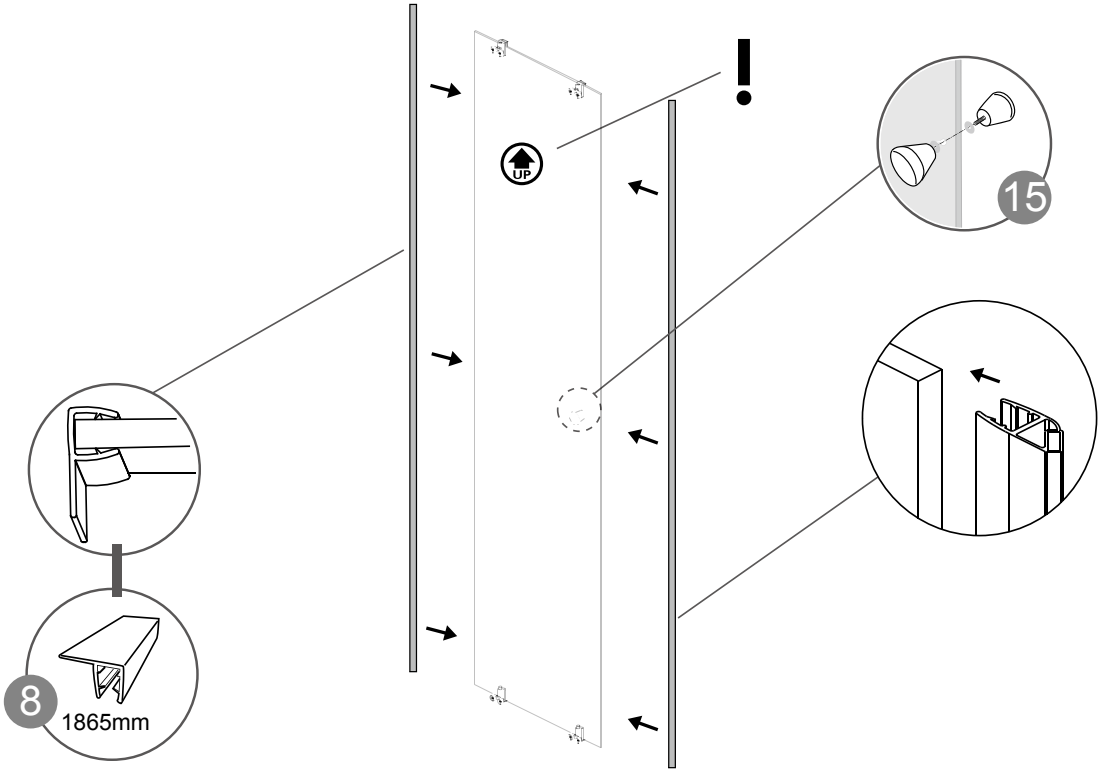

19

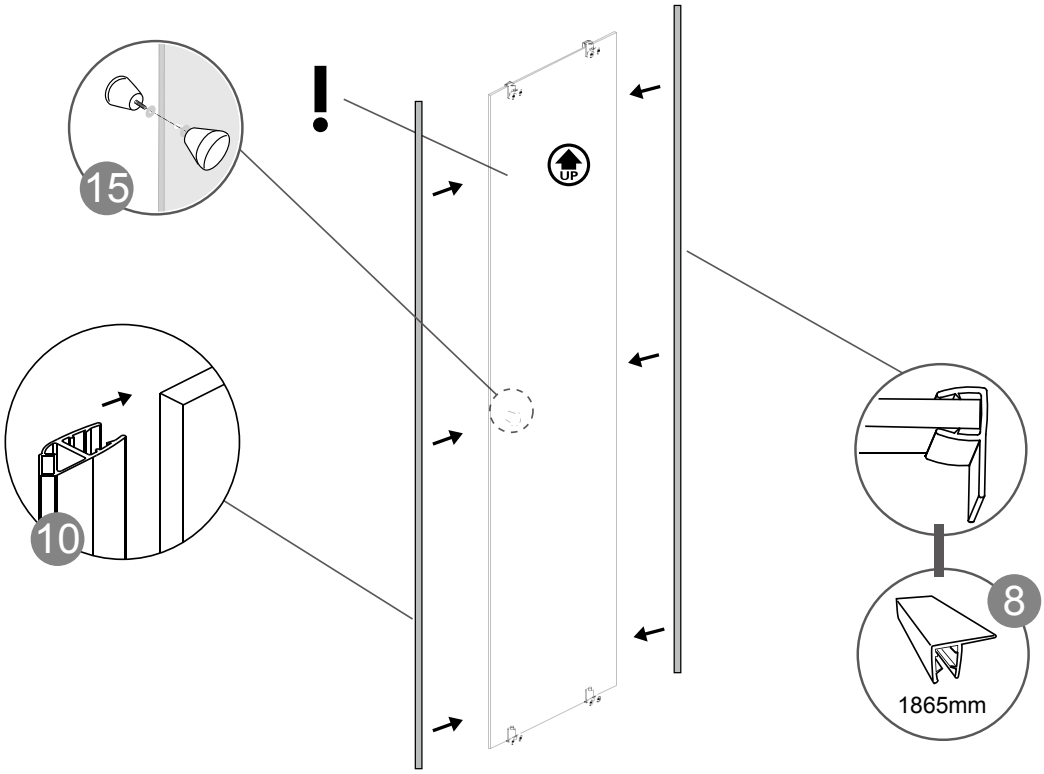

20

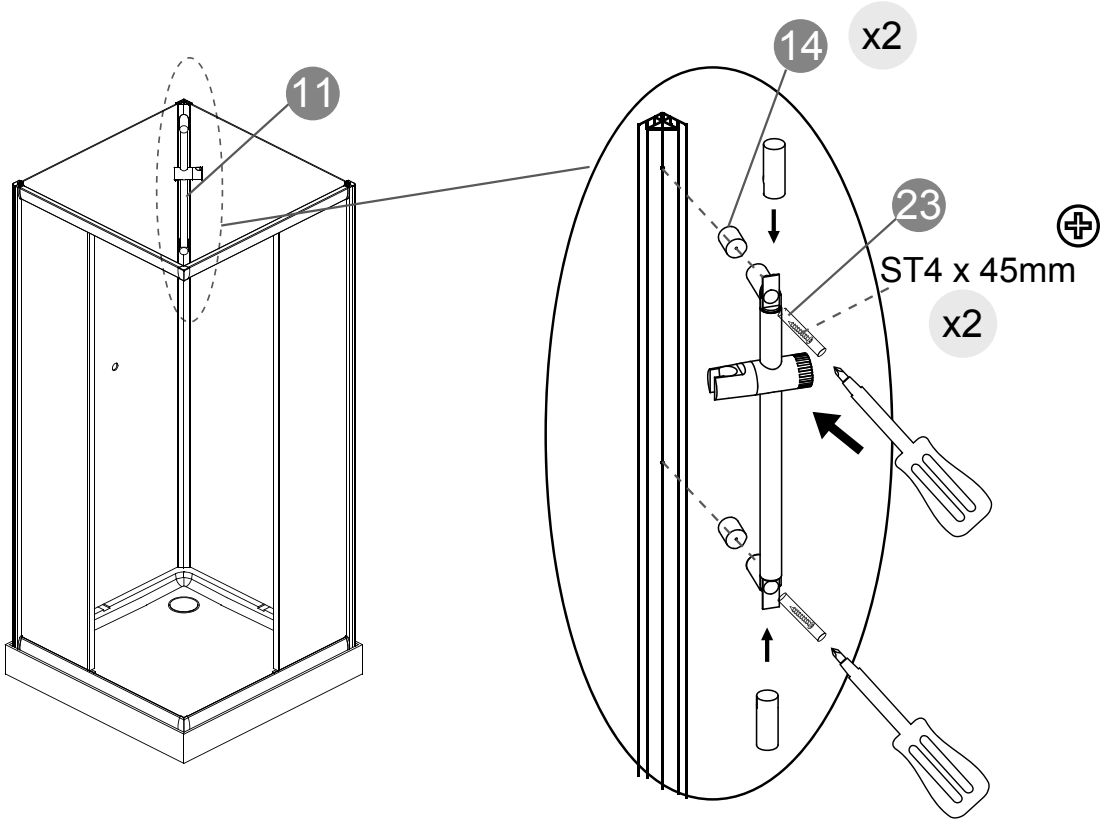

21

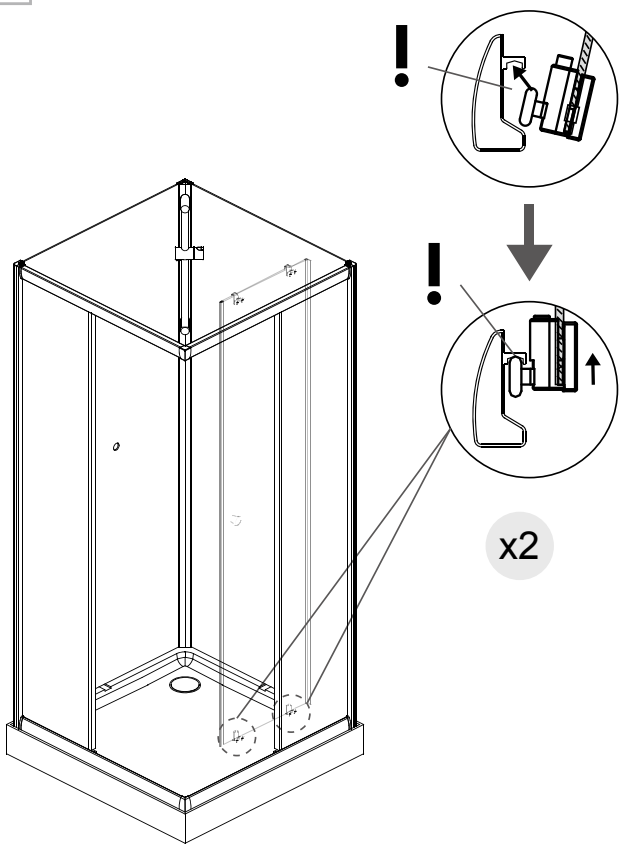

22

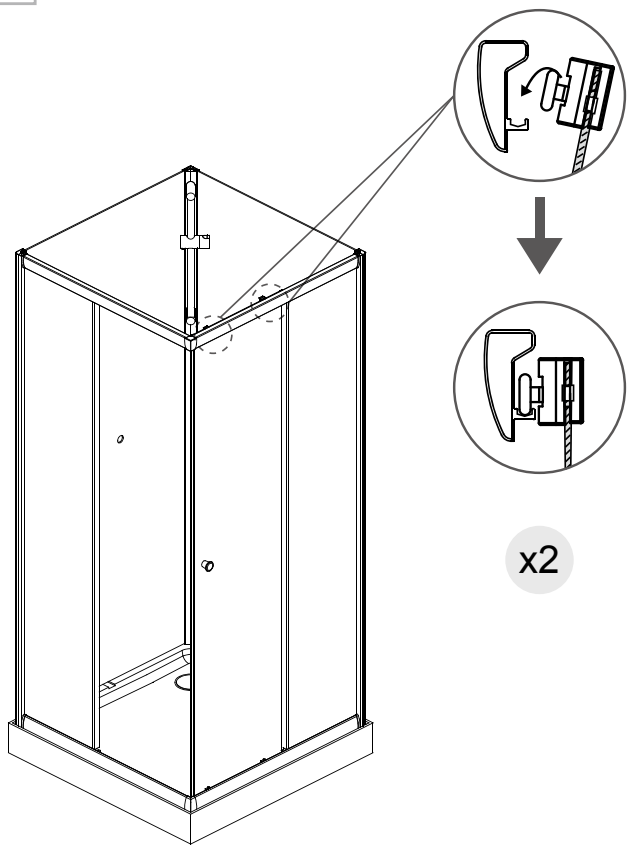

23

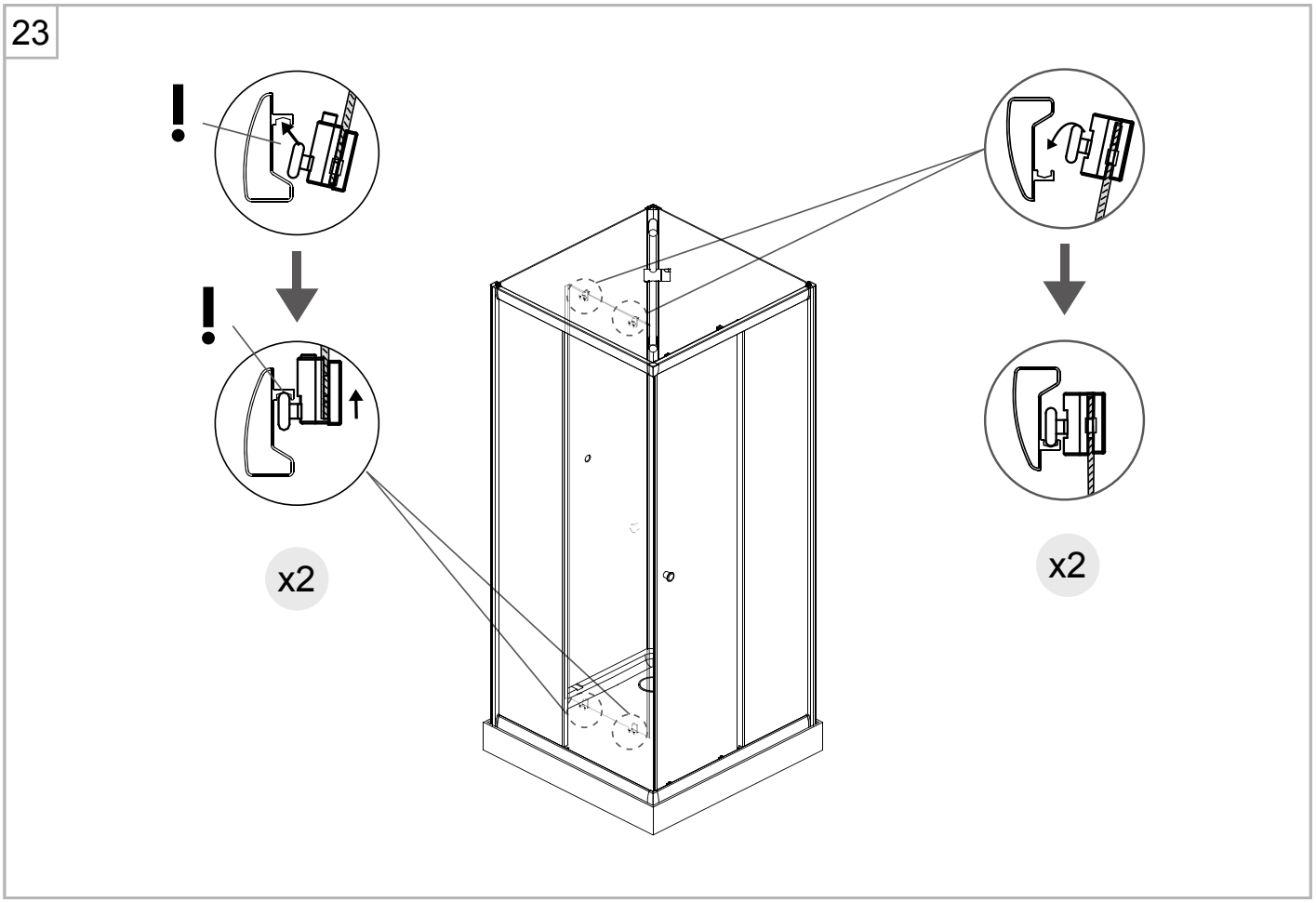

24

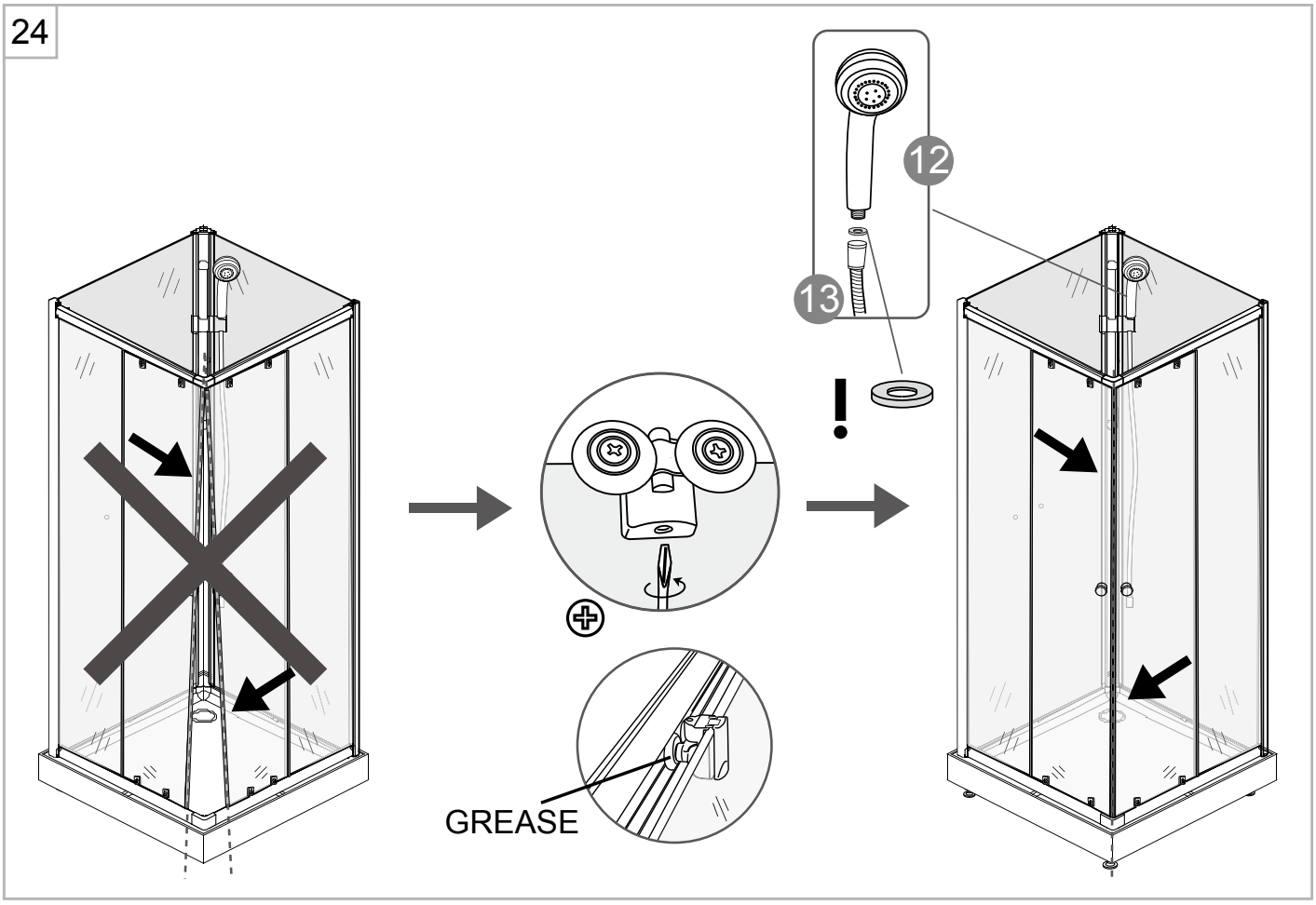

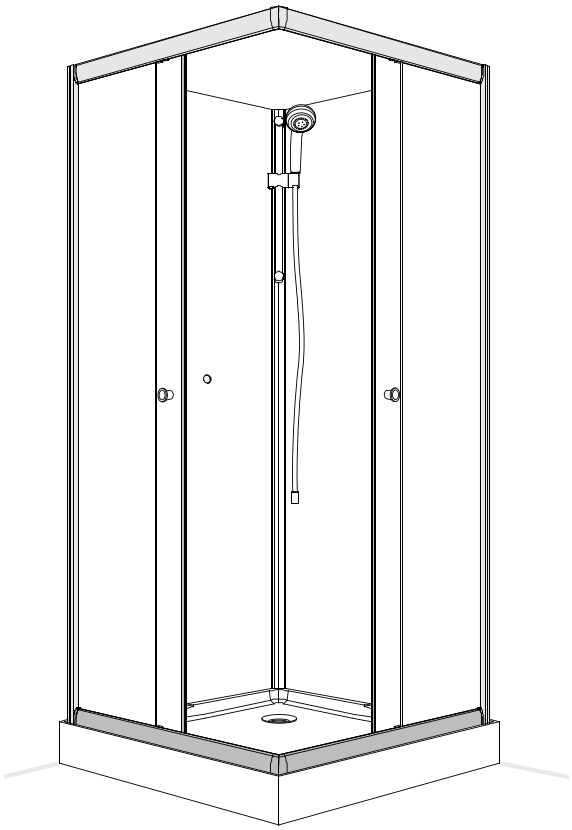

LAKE

035 166430 SE
info@n oro.se

020 7435740 FI
info@norokylpyhuone.fi

216 28860 NO
info@noro.se

702 52822 DK
info@noro.dk

Ver.003